9. Engine Assembly

A: REMOVAL

1) Set the vehicle on a lift.
2) Open the front hood fully and support with the front food stay.
3) Collect the refrigerant from A/C system. <Ref. to AC-19, Refrigerant Recovery Procedure.>
4) Release the fuel pressure. <Ref. to FU(H4DOTC)-55, RELEASING OF FUEL PRESSURE, PROCEDURE, Fuel.>
5) Disconnect the ground cable from the battery.

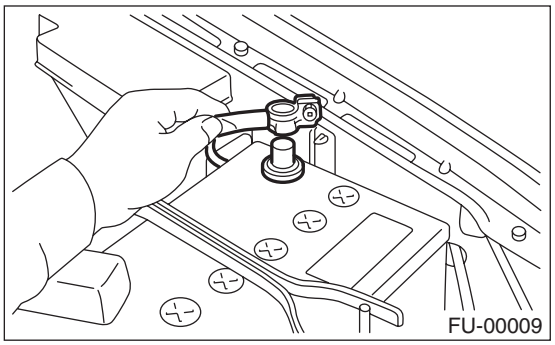

6) Open the fuel flap lid, and remove the fuel filler cap.
7) Remove the air cleaner case and air intake boot. <Ref. to IN(H4DOTC)-10, REMOVAL, Air Cleaner Case.>
8) Remove the radiator from vehicle. <Ref. to CO(H4DOTC)-25, REMOVAL, Radiator.>
9) Remove the coolant filler tank. <Ref. to CO(H4DOTC)-35, REMOVAL, Coolant Filler Tank.>
10) Remove the secondary air pump. <Ref. to EC(H4DOTC)-9, REMOVAL, Secondary Air Pump.>
11) Disconnect the A/C pressure hoses from A/C compressor.

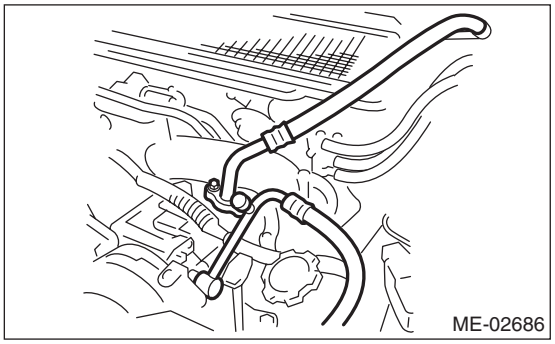

12) Remove the intercooler. <Ref. to IN(H4DOTC)-13, REMOVAL, Intercooler.>
13) Disconnect the following connectors and cables.
(1) Engine harness connectors

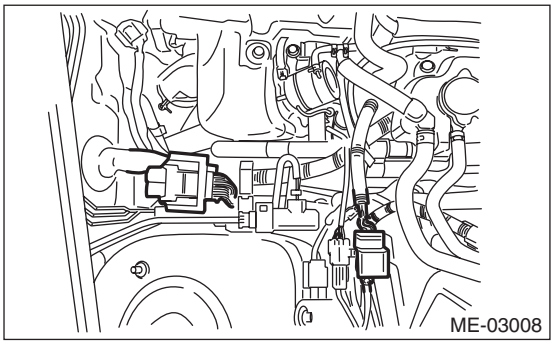

(2) Engine ground terminal

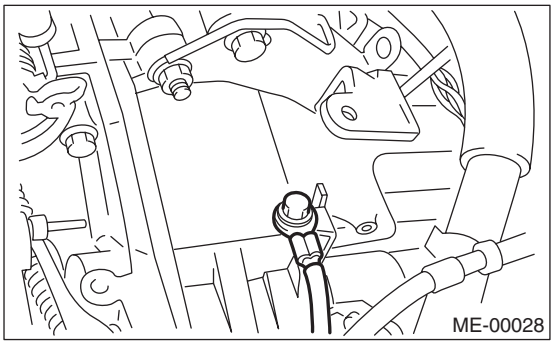

(3) Left and right engine ground cables

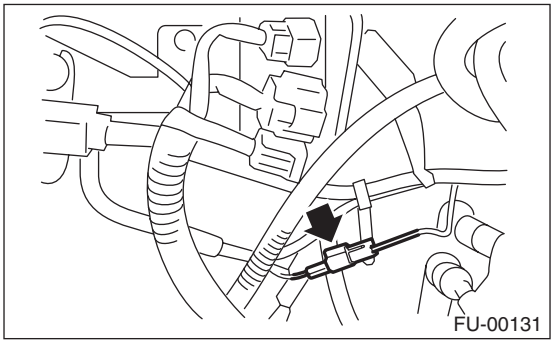

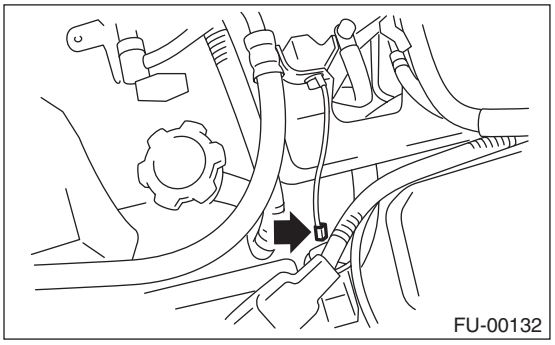

(4) Generator connector, terminal and A/C compressor connector

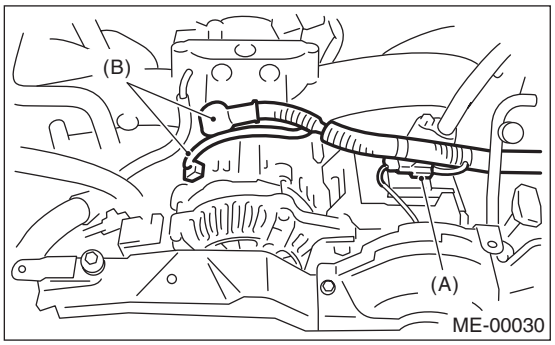

(A) A/C compressor connector
(B) Generator connector and terminal

(5) Power steering switch connector

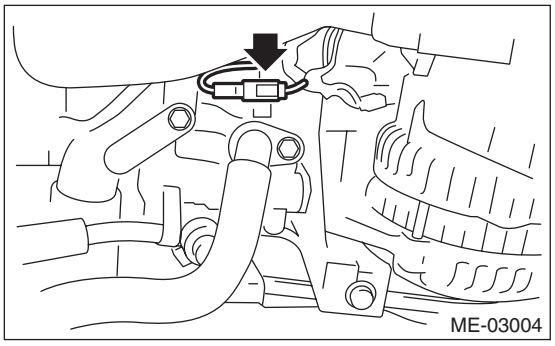

(6) Clutch release spring

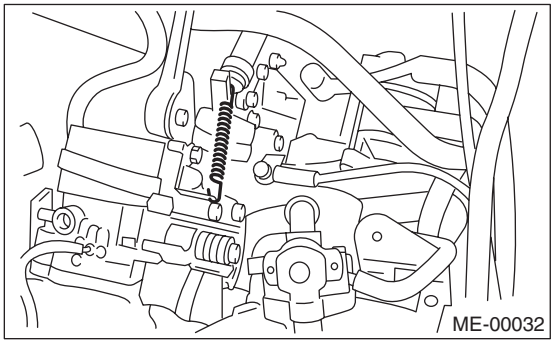

14) Disconnect the following hoses.
(1) Brake booster vacuum hose

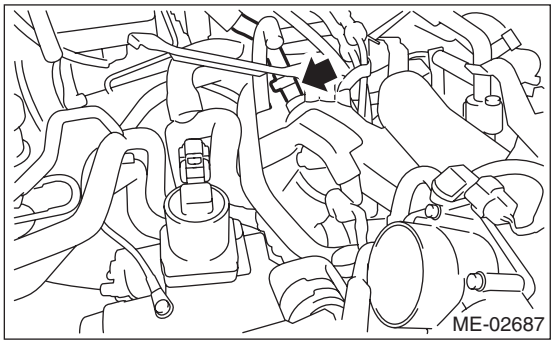

(2) Heater inlet and outlet hoses

15) Remove the power steering pump.
(1) Remove the front V-belt. <Ref. to ME(H4DOTC)-44, FRONT SIDE BELT, REMOVAL, V-belt.>
(2) Remove the power steering pipe from the fuel pipe protector RH along with the bracket.

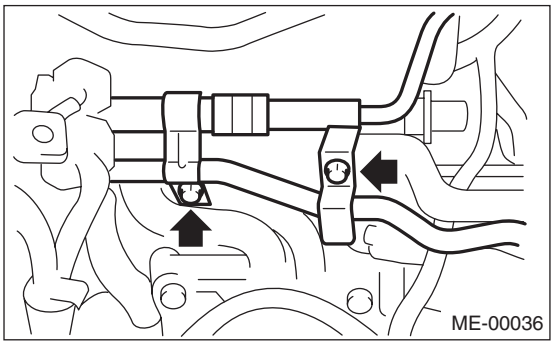

(3) Remove the power steering pump.

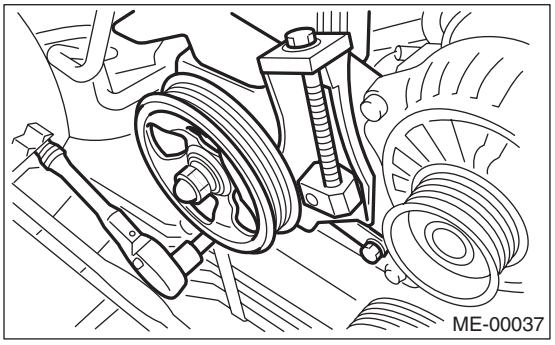

(4) Remove the reservoir tank from the bracket by pulling it upwards.

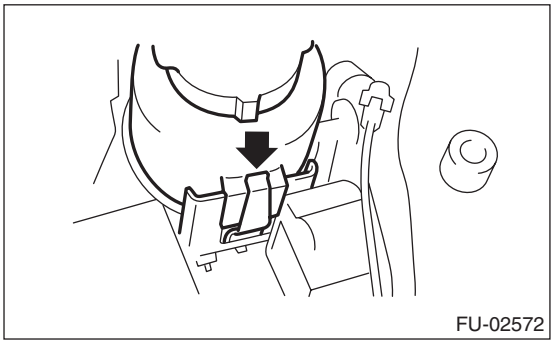

(5) Place the power steering pump on the right side wheel apron.

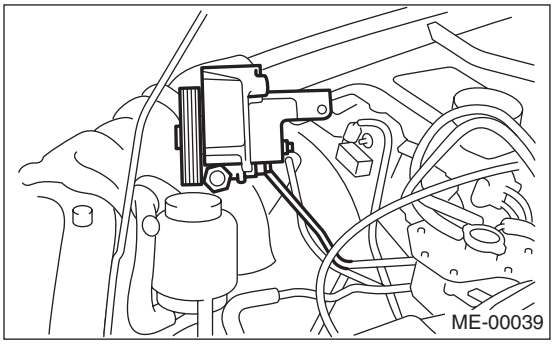

16) Lift up the vehicle.

17) Remove the ATF cooler pipe from frame. (AT model)
18) Remove the center exhaust pipe. <Ref. to EX(H4DOTC)-10, REMOVAL, Center Exhaust Pipe.>
19) Remove the bolts and nuts which hold lower side of transmission to engine.

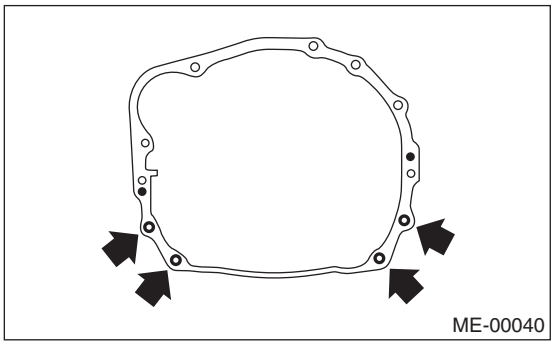

20) Remove the nuts which install front cushion rubber onto front crossmember.

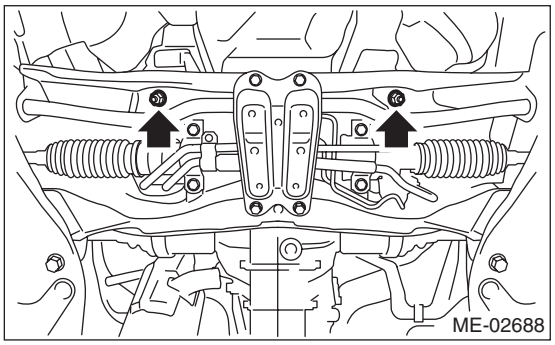

21) Separate the clutch release fork from the release bearing. (MT model) <Ref. to CL-18, REMOVAL, Release Bearing and Lever.>
22) Separate the torque converter clutch from drive plate. (AT model)
(1) Lower the vehicle.
(2) Remove the service hole plug.
(3) Remove the bolts which hold torque converter clutch to drive plate.
(4) Remove other bolts while rotating the crankshaft using socket wrench.

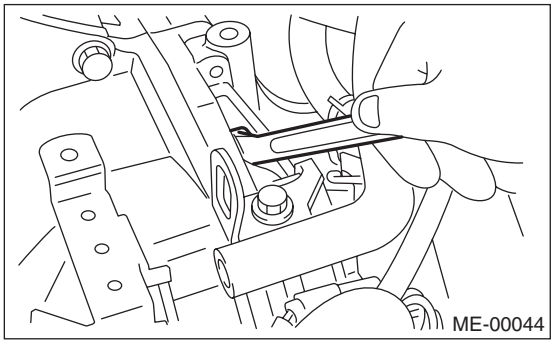

23) Remove the pitching stopper.

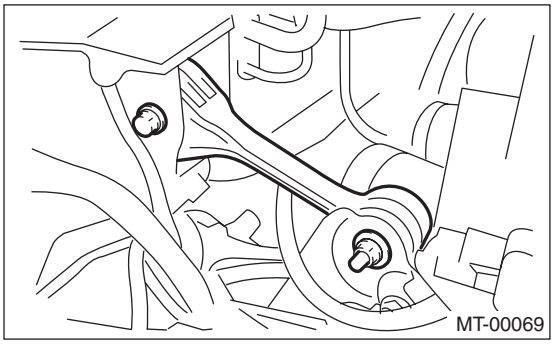

24) Remove the fuel hoses from the fuel pipes using the ST. <Ref. to FU(H4DOTC)-70, REMOVAL, Fuel Delivery, Return and Evaporation Lines.>

CAUTION:
- **Be careful not to spill fuel.**
- **Catch the fuel from hoses using a container or cloth.**

ST 42099AE000 CONNECTOR REMOVER

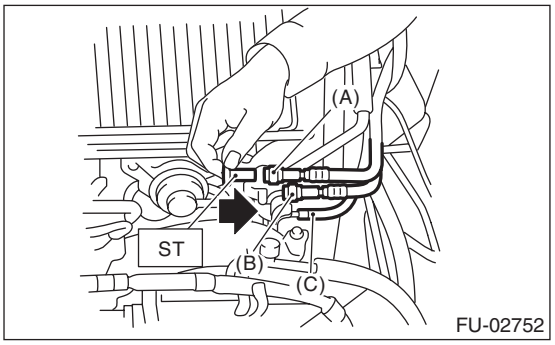

(A) Fuel delivery hose
(B) Return hose
(C) Evaporation hose

25) Support the engine with a lifting device and wire ropes.

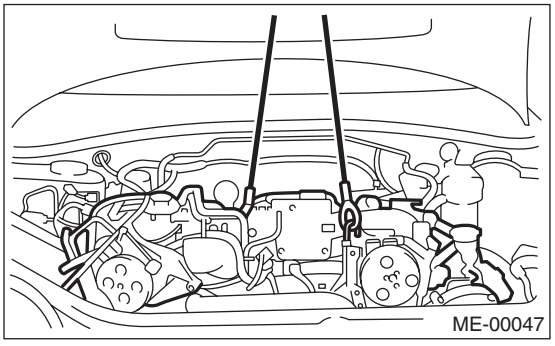

26) Support the transmission with a garage jack.

CAUTION:
Doing this is very important to prevent the transmission from lowering due to its own weight.

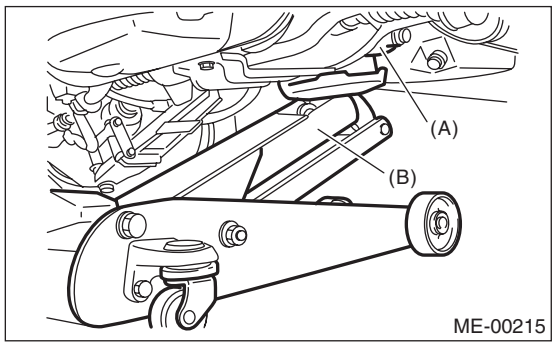

(A) Transmission
(B) Garage jack

CAUTION:
Before removing the engine away from transmission, check to be sure no work has been overlooked.

27) Separate the engine and transmission.
(1) Remove the starter. <Ref. to SC(H4SO)-8, REMOVAL, Starter.>
(2) Set the ST to torque converter clutch case. (AT model)

ST 498277200 STOPPER SET

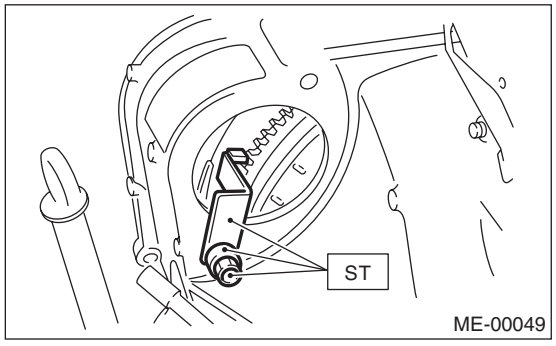

(3) Remove the bolts which hold upper side of transmission to engine.

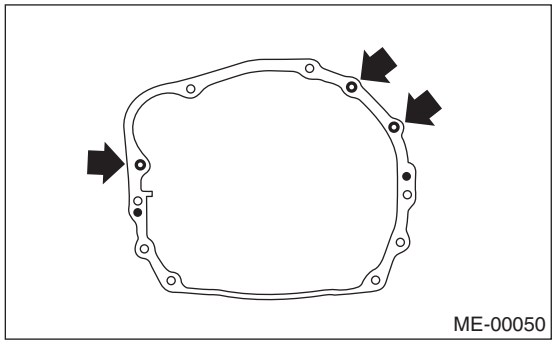

28) Remove the engine from vehicle.
(1) Slightly raise the engine.
(2) Raise the transmission with garage jack.
(3) Move the engine horizontally until main shaft is withdrawn from clutch cover.
(4) Slowly move the engine away from engine compartment.

NOTE:
Be careful not to damage adjacent parts or body panels with crank pulley, oil level gauge, etc.

29) Remove the front cushion rubbers.

B: INSTALLATION

1) Attach the clutch release fork and bearing to the transmission. (MT model) <Ref. to CL-18, INSTALLATION, Release Bearing and Lever.>
2) Install the front cushion rubbers.

Tightening torque:
35 N·m (3.6 kgf-m, 25.8 ft-lb)

3) Position the engine in engine compartment and align it with transmission.

NOTE:
Be careful not to damage adjacent parts or body panels with crank pulley, oil level gauge, etc.

4) Apply a small amount of grease to the splines of the main shaft. (MT model)
5) Tighten the bolts which hold upper side of transmission to engine.

Tightening torque:
50 N·m (5.1 kgf-m, 37 ft-lb)

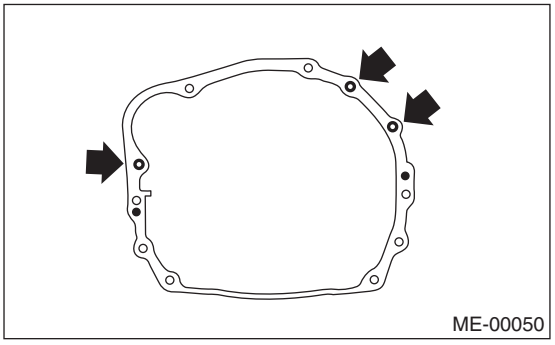

6) Remove the lifting device and wire ropes.

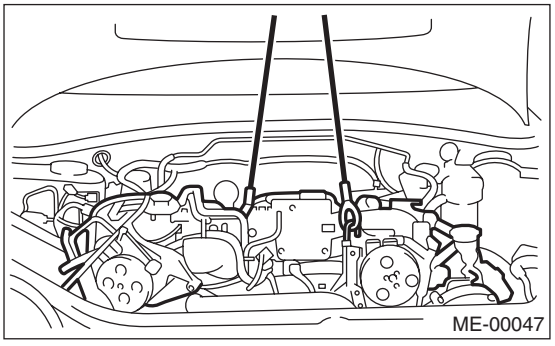

7) Remove the garage jack.

8) Install the pitching stopper.

Tightening torque:
T1: 50 N·m (5.1 kgf-m, 37 ft-lb)
T2: 58 N·m (5.9 kgf-m, 43 ft-lb)

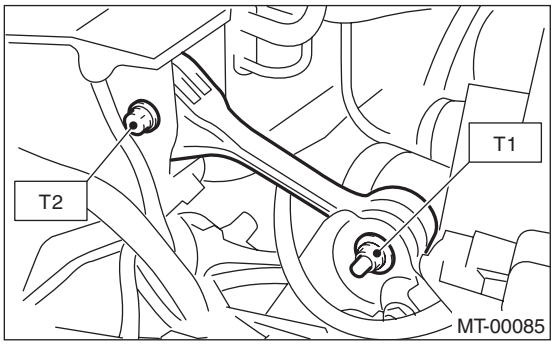

9) Remove the ST from the torque converter clutch case. (AT model)

NOTE:
Be careful not to drop the ST into the torque converter clutch case when removing the ST.
ST 498277200 STOPPER SET

10) Install the starter. <Ref. to SC(H4SO)-8, INSTALLATION, Starter.>

11) Install the torque converter clutch to drive plate. (AT model)
(1) Tighten the bolts which hold torque converter clutch to drive plate.
(2) Tighten other bolts while rotating the crankshaft using socket wrench.

NOTE:
Be careful not to drop bolts into the torque converter clutch housing.

Tightening torque:
25 N·m (2.5 kgf-m, 18.4 ft-lb)

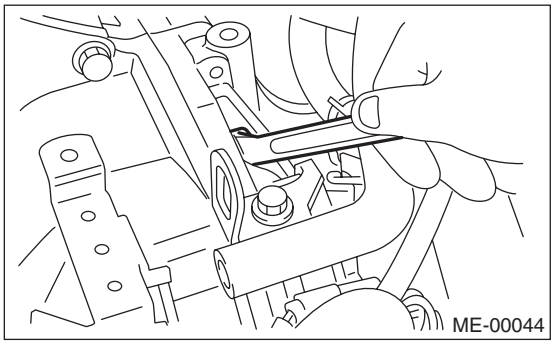

(3) Install the service hole plug.

12) Install the power steering pump.
(1) Install the reservoir tank to the bracket.

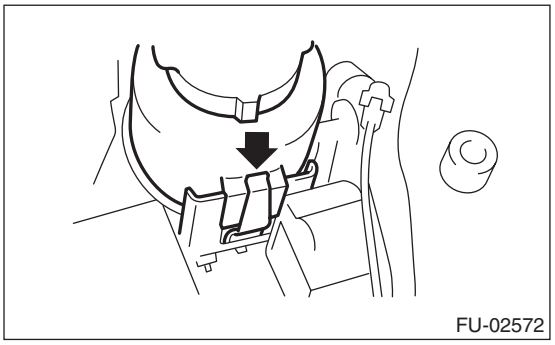

(2) Install the power steering pump. <Ref. to PS-60, INSTALLATION, Oil Pump.>

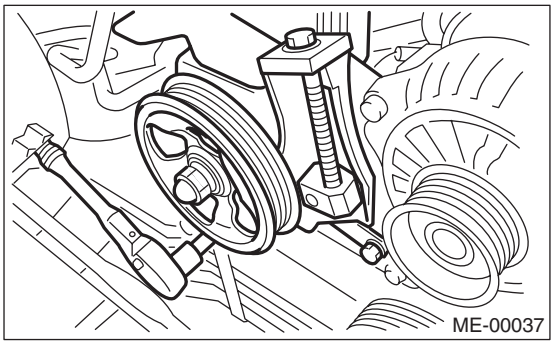

(3) Install the power steering pipes onto the fuel pipe protector RH.

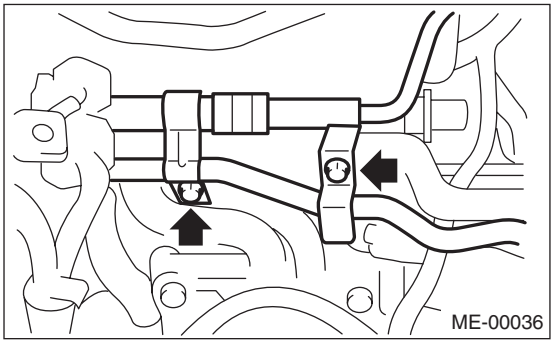

(4) Install the front V-belt and adjust it. <Ref. to ME(H4DOTC)-44, FRONT SIDE BELT, INSTALLATION, V-belt.>

13) Lift up the vehicle.

14) Tighten the nuts which hold lower side of transmission to engine.

Tightening torque:
50 N·m (5.1 kgf-m, 37 ft-lb)

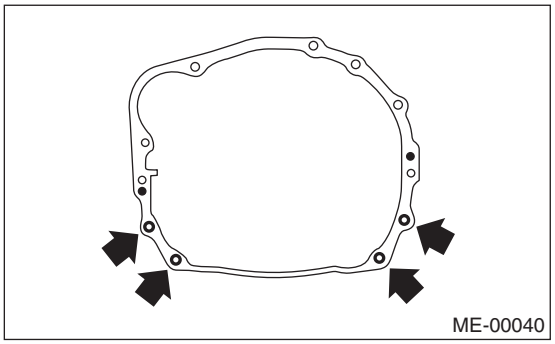

15) Tighten the nuts which install the front cushion rubber onto crossmember.

Tightening torque:
85 N·m (8.7 kgf-m, 62.7 ft-lb)

NOTE:
Make sure the front cushion rubber mounting bolts (A) and locator (B) are securely installed.

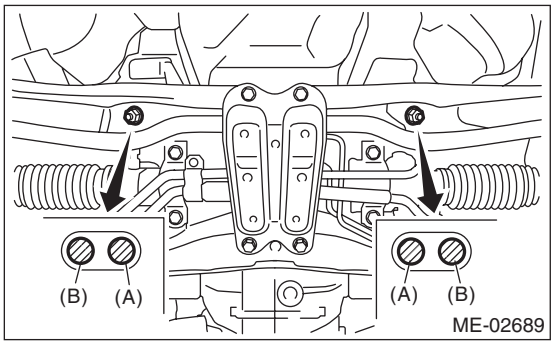

16) Install the ATF cooler pipe to frame. (AT model)
17) Install the center exhaust pipe. <Ref. to EX(H4DOTC)-11, INSTALLATION, Center Exhaust Pipe.>
18) Lower the vehicle.
19) Connect the following hoses.
(1) Fuel delivery hose, return hose and evaporation hose
(2) Heater inlet and outlet hoses
(3) Brake booster vacuum hose
20) Connect the following connectors and terminals.
(1) Engine ground terminal
(2) Engine harness connectors
(3) Generator connector and terminal
(4) A/C compressor connector
(5) Power steering switch connector
21) Adjust after connecting the cables.
22) Install the intercooler. <Ref. to IN(H4DOTC)-14, INSTALLATION, Intercooler.>
23) Install the air cleaner case and air intake boot. <Ref. to IN(H4DOTC)-10, INSTALLATION, Air Cleaner Case.>
24) Install the A/C pressure hoses.

NOTE:
Use new O-rings.

Tightening torque:
15 N·m (1.5 kgf-m, 10.8 ft-lb)

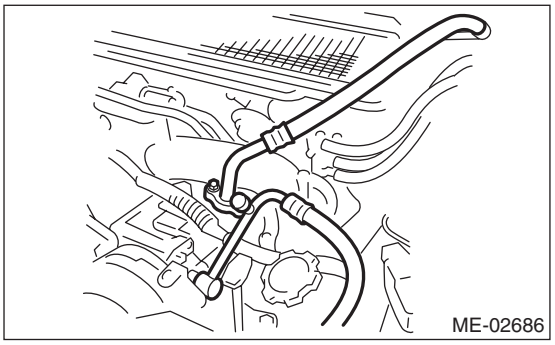

25) Install the radiator. <Ref. to CO(H4DOTC)-26, INSTALLATION, Radiator.>
26) Install the coolant filler tank. <Ref. to CO(H4DOTC)-35, INSTALLATION, Coolant Filler Tank.>
27) Install the secondary air pump. <Ref. to EC(H4DOTC)-9, INSTALLATION, Secondary Air Pump.>
28) Install the battery in the vehicle, and connect cables.
29) Fill engine coolant. <Ref. to CO(H4DOTC)-19, FILLING OF ENGINE COOLANT, REPLACEMENT, Engine Coolant.>
30) Check the ATF level and replenish it if necessary. (AT model) <Ref. to 4AT-28, INSPECTION, Automatic Transmission Fluid.>
31) Charge the A/C system with refrigerant. <Ref. to AC-20, PROCEDURE, Refrigerant Charging Procedure.>
32) Remove the front hood stay, and close the front hood.
33) Lower the vehicle from the lift.